# 104R Ball Valve

## 1-Piece Reduced Port

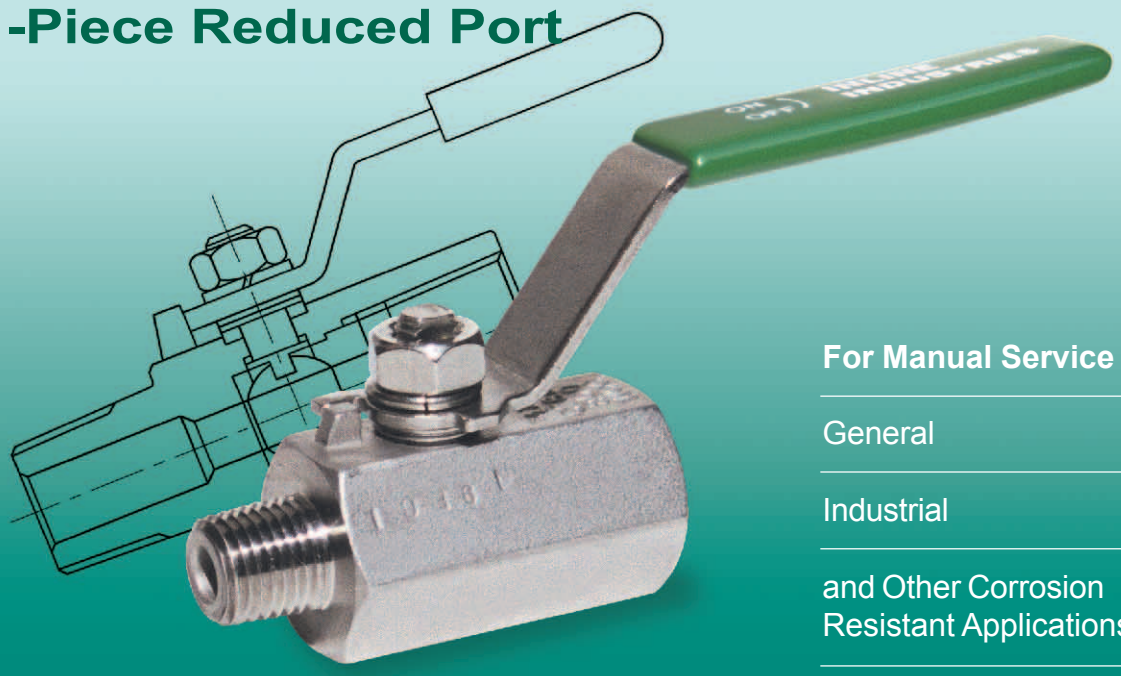

**For Manual Service**

General

Industrial

and Other Corrosion Resistant Applications

## Standard Features and Benefits

- **Male x Female Connections**
  The 104R has been designed with opposing male x female NPT connections in a number of size combinations to eliminate the need for pipe nipples
  Decreases the number of potential leak paths and reduces overall length
- **Economical 1-Piece Design**
- **Corrosion Resistant**
  Stem and ball are made of corrosion resistant stainless steel for trouble-free service and long life
- **Blow-Out-Proof Stem**
  Stem is bottom loaded to prevent removal during operation

## Options

- Compact T handle for restricted space requirements

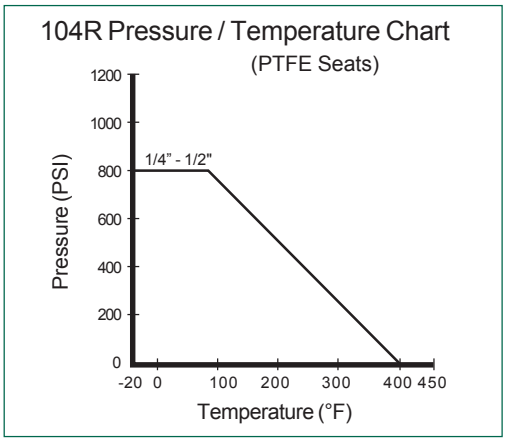


## Operating Conditions

- Temperature range (PTFE):
  -20°F ~ 400°F
- Maximum pressure (PTFE):
  800 PSI CWP (1/4" ~ 1/2")

## Specifications

- All valves shell and seat tested to ANSI/ASME B16.34 and API 598

INLINE
BALLVALVE.COM

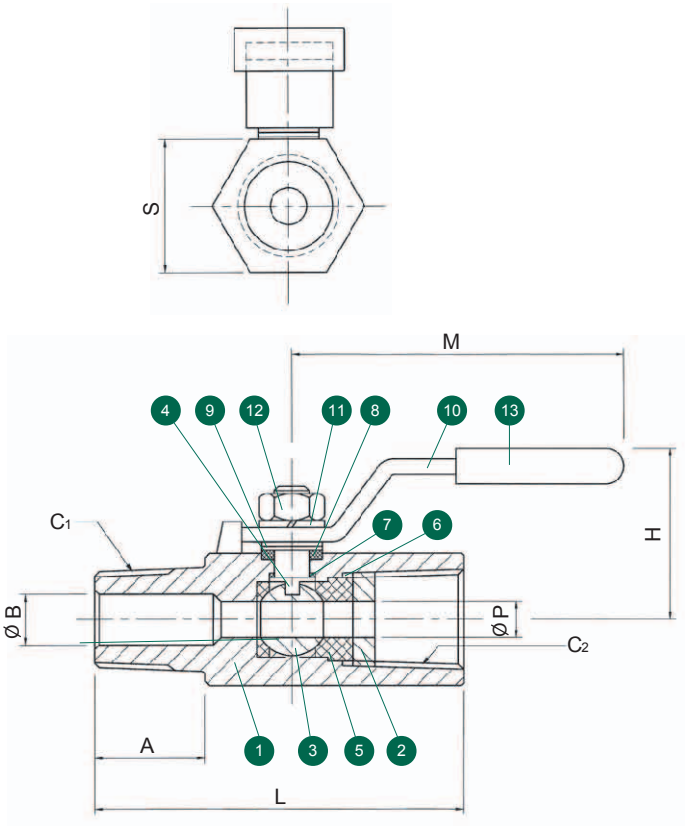


| Valve Components | | | |
|---|---|---|---|
| # | Part Name | Material | Qty. |
| 1 | Body | A351 Gr. CF8M | 1 |
| 2 | Insert | 316SS | 1 |
| 3 | Ball | 316SS | 1 |
| 4 | Stem | 316SS | 1 |
| 5 | Seat | PTFE | 2 |
| 6 | Body Seal | PTFE | 1 |
| 7 | Thrust Washer | PTFE (15% C.F.) | 1 |
| 8 | Stem Packing Set | PTFE | 1 |
| 9 | Packing Gland | 304SS | 1 |
| 10 | Handle | 304SS | 1 |
| 11 | Split Washer | 304SS | 1 |
| 12 | Handle Nut | 304SS | 1 |
| 13 | Handle Cover | Vinyl | 1 |

| Dimensions (Inches) | | | | | | | | |
|---|---|---|---|---|---|---|---|---|
| Size $C_1$ x $C_2$ | L | P | A | B | M | H | S | Weight (lbs) |
| 1/4 x 1/4 | 1.83 | 0.20 | 0.59 | 0.26 | 1.50 | 1.25 | 0.68 | 0.19 |
| 1/4 x 3/8 | 2.00 | 0.28 | 0.51 | 0.28 | 2.90 | 1.45 | 0.83 | 0.25 |
| 1/4 x 1/2 | 2.35 | 0.36 | 0.59 | 0.26 | 1.50 | 1.65 | 0.98 | 0.38 |
| 3/8 x 3/8 | 2.20 | 0.28 | 0.60 | 0.35 | 2.90 | 1.45 | 0.83 | 0.28 |
| 3/8 x 1/2 | 2.40 | 0.36 | 0.60 | 0.35 | 3.70 | 1.65 | 0.98 | 0.38 |
| 1/2 x 1/2 | 2.40 | 0.36 | 0.70 | 0.43 | 3.70 | 1.65 | 0.98 | 0.44 |

## 104R Ordering Information

Example: 1/2” MNPT X 1/2” FNPT Ball Valve with Lever Handle, Cast 316SS Body and Trim, PTFE Seats and Seals, NPT Ends

| 104R | 22 | | 6 | T | T |
|---|---|---|---|---|---|
| **Valve Series** | **Valve Size ($C_1$ x $C_2$)** | | **Body and Trim Material** | **Seat** | **Seal** |
| **104R -** Reduced Port | **22** | 1/4” x 1/4” | **6 -** A351 Gr. CF8M Body (316)<br>A351 Gr. CF8M Trim (316) | **T** - PTFE | **T** - PTFE |
| | **23** | 1/4” x 3/8" | | | |
| | **24** | 1/4” x 1/2" | | | |
| | **33** | 3/8” x 3/8" | | | |
| | **34** | 3/8” x 1/2" | | | |
| | **44** | 1/2” x 1/2" | | | |

Due to continuous product development, information may change without notice.

Distributed by:

INLINE BALLVALVE.COM
INLINE INDUSTRIES, INC.
4701-A Littlejohn Street
Baldwin Park, CA 91706
Tel: (626) 813-6188
Fax: (626) 813-6186
*www.ballvalve.com*
*info@ballvalve.com*

© 2004 Inline Industries. All rights reserved. 0406.1